BOLLFILTER
Protection Systems

Safety needs quality.

BOLL Automatic Filters
SELFCLEAN
TYPE 6.60/6.61

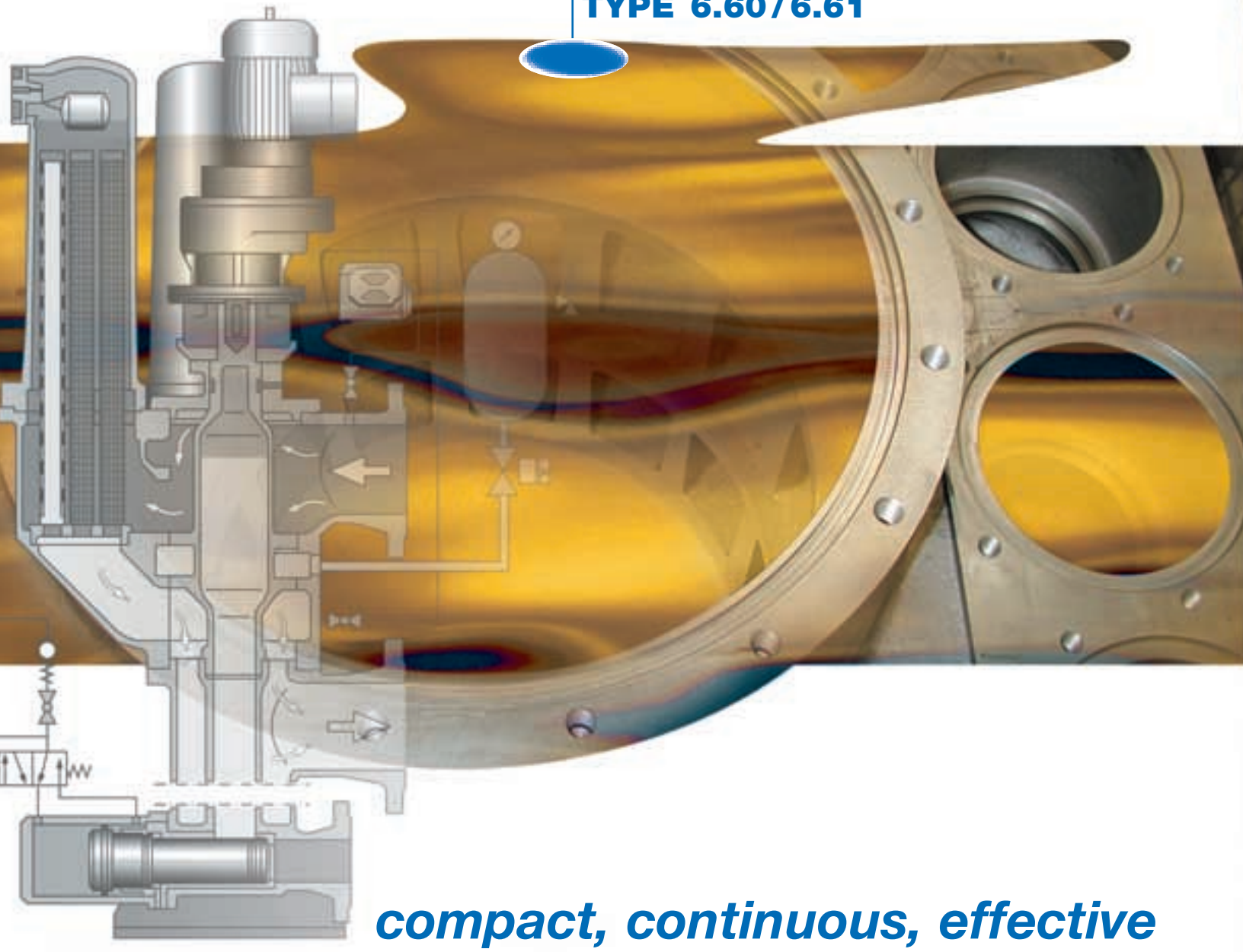

compact, continuous, effective

BOLL & KIRCH Filterbau GmbH

THE ADVANTAGES

Pointing the way, economically and ecologically

In economic terms, the best is always the result of "as much as possible" for "as little as necessary". Where the use of liquid fuels, lubricants and cutting oil and coolants is concerned, this means: consistent, precise filtration and regeneration of the liquid with minimal losses, a requirement for a forward-looking business. One-off investment in high quality filter systems becomes more cost-effective with increased service life and improved protection of machinery. In many cases it is possible to replace existing, outdated filters with the new Boll 6.60/6.61 model, with minimum disruption.

BOLLFILTERs consistently remove dirt particles from contaminated liquid and recycle the cleaned substances back into the process. They help to ensure the plant's operational safety continuously over a long period. This saves resources, protects the environment and reduces costs. BOLLFILTERs are the best insurance for the product and the process.

Optionally the filter type SELFCLEAN 6.60/6.61 *can be equipped with a cartridge filter for the backflushed liquid from the filter chamber.*

THE CONCEPT

Several filters in individual chambers

The BOLL automatic filter SELFCLEAN TYPE 6.60/6.61 is designed precisely to fulfil the task. The filter housing is equipped with several filter chambers. Each filter chamber contains a filter insert made-up of a number of filter candles, each candle is made from a spiral-wound support structure over which high-grade filter mesh is drawn. Large filter surfaces with high "free passage" areas guarantee a low pressure differential. As each filter chamber becomes dirt-loaded, it is isolated from flow and regenerated by back-flushing, each in sequence with no interruption to operation. During the filtration process one filter chamber with cleaned filter candles is always held in reserve, whilst the other filter chambers are simultaneously providing the filtration function. As the amount of contamination increases, the differential pressure indicator initiates the back-flushing phase via the electronic control. Compressed air is used for cleaning the filter candles. The system pressure remains constant and the flushing quantities produced are very low. Additionally, the compact construction means little space is required to install the filter. This filter series can be provided with a sludge treatment unit on request.

Determining the Filter Size

The key data for the determination of the filter size are the operation parameters. The size is determined by the type and nature of the liquid being filtered, the flow rate, the degree of contamination, the filtration fineness required and the permissible pressure drop across the filter. The diagram indicates as an example the flow rate Q in m³/hr of oil SAE 30 for various filter sizes at a filtration fineness of 48 mm in relation to the pressure drop Δp in bar.

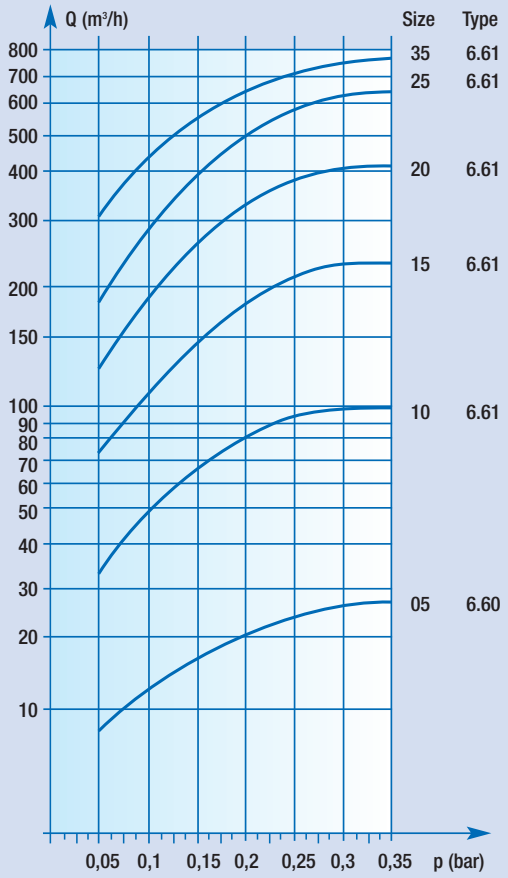

Control and monitoring

The fully automatic filter complies with, amongst other things, the provisions of Marine Classification Societies (GL, LRS, NV, BV, ABS, USSR-Reg. USCG etc) for unsupervised operation on board ship.

The back-flushing filter is provided, as standard, with an electronic control Type 2100 with the following facilities and functions:

- Three keys for operation
- 5-place, 7-segment display
- Display of back-flushing operation and number of back-flushing operations
- Fault display
- CPU board with non-volatile E-EPROM and program memory
- I.O. board in the control box

THE SOLUTION

To carry on flushing throughout filtration

During the filtration operation the liquid to be filtered enters through the inlet ❶ into the change-over housing, on which the filter chambers ❷ with the filter candles ❸ are mounted. The rotary selector mechanism is ❹ located in the centre of the housing. The contaminated liquid is fed into the filter chambers and flows through the filter candles from outside to inside. The solids to be filtered out are retained on the filter mesh. Cleaned liquid passes through the inside of the candle to the filter outlet ❺ in the lower section of the housing.

During this process one filter chamber is held in reserve with cleaned filter candles, separate from the filtration process, the sludge discharge valve ❻ is closed and compressed air is stored in the air reservoir.

The growing layer of dirt on the filter mesh results in a pressure differential between the dirty side and the clean side; self-cleaning of one filter chamber is automatically triggered once this differential reaches a predetermined value. The electric motor ❽ (or, in the case of the TYPE 6.60 a pneumatic drive system) turns the selector mechanism until the inlet and outlet to one contaminated chamber is blocked, simultaneously releasing the reserve chamber. Now the sludge discharge valve ❻ opens and the blocked chamber is depressurised. At the same time the filter-stored compressed air is explosively released from the upper hollow space of the selector mechanism ❿ and discharges the liquid from the selector mechanism ❹ and the closed-off filter chamber. In parallel with the pressure release the flushing valve ❾ opens. The compressed air from the air reservoir ❼ accelerates the clean liquid in the filter chamber and pushes it in the reversed flow through the filter candles. Due to the pressure burst, the dirt particles are flushed off the filter mesh and out of the filter housing through the opened sludge discharge valve ❻.

Compressed air then continues to flow for a short period, then the sludge discharge valve and flushing valve are again closed. The now clean but empty chamber is filled with clean liquid via a top-up bore ⓫ in the selector mechanism, to become the reserve chamber, ready to be brought into use on next signal.

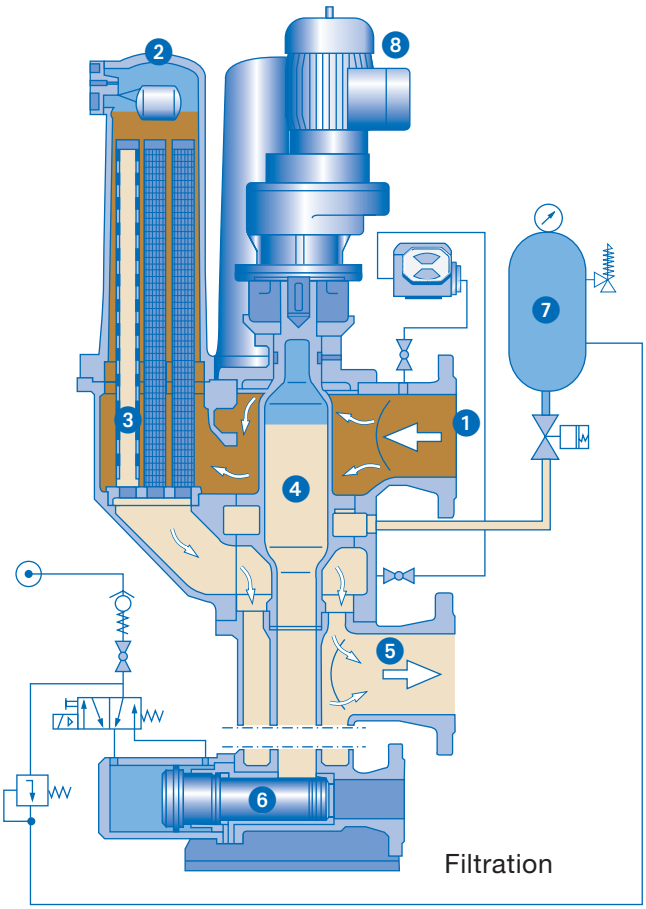

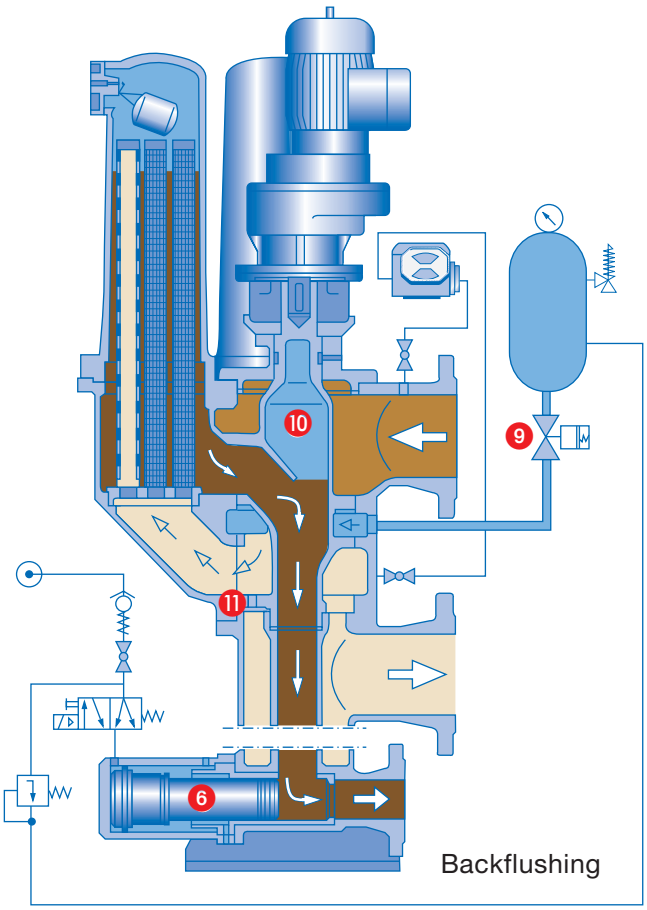

Filtration of the back-flushing liquid

The back-flushed liquid can be cleaned and recycled by means of a cartridge filter connected to the sludge outlet. This consists of a sludge reservoir, the filter cartridge, and a monitoring device. The sludge reservoir is dimensioned such that it can accommodate the quantity of liquid produced during back-flushing of one filter chamber. After back-flushing the liquid into the sludge chamber it is driven though the filter cartridge by means of compressed air. The filter is equipped with easy-maintenance filter cartridges. A pressure differential indicator shows when it is necessary for cartridges to be replaced.
Because the flushing liquid is recycled, there is no need for sludge-discharge pipework, resulting in considerable cost savings.

THE DETAILS

Data and Facts at a glance

	SELFCLEAN TYPE 6.60 / 6.61 Multi-chamber automatic filter with compressed-air back-flushing
Range of application	Lubricating oil, diesel oil, heavy fuel oil, cutting oil, emulsions, coolant, industrial wash liquids
Operating pressures	up to 10 bar (higher pressures on request)
differential pressure resistance	up to operating pressure
Operating temperature	up to 150°C
Housing material	grey cast iron and ductile iron
Nominal width coupling flange	DN 50 - DN 350
Max. flow rate	800 m³/h
Filtration fineness	up to 10 microns absolute
Filter candle type	Cylindrical screw-in candles with woven mesh
Cleaning method	Sequential, reversed flow back-flushing , assisted by compressed air
Back-flushing control	Differential pressure dependent or time-dependent

Technical data	Type	Size	Number of chambers		Total number of filter candles	Filtration area in use cm²	Weight of filter (kg)	
			Total	In use			Empty	Filled
	6.60	05	2	1	16	2944	100	115
	6.61	10	4	3	32	8832	200	238
	6.61	15	7	6	56	17664	345	416
	6.61	20	6	5	114	34960	500	650
	6.61	25	8	7	152	48944	726	956
	6.61	35	11	10	209	69920	1100	1460

THE TASK

Filtering without pressure drop

The trouble-free operation of all internal combustion engines or machining plants requires consistently good plant conditions, for which the cleanliness of the fuels, lubricants or cutting oils and coolants is essential. A constant operating pressure is also important. To achieve the necessary purity of these liquids, and guarantee constant pressure ratios, efficient automatic filters are required. These filters must

- have the capacity to handle high rates of flow and remain compact and ergonomic in design
- minimise back-flush discharge volumes to minimise waste
- guarantee a defined degree of cleanliness of the liquids
- achieve a high level of filter surface regeneration by efficient, dynamic self-cleaning
- prevent any drop in system pressure during the back-flushing process
- protect moving parts from wear, increasing the useful life of the plant, and
- help to keep operating costs low by using durable components.

The BOLL automatic filter SELFCLEAN TYPE 6.60/6.61 *has a wide variety of uses, e.g. filtration of lubricants in diesel engines,*

... filtration of fuels or

... filtration of cutting oils and coolants in machining plants and transfer lines

THE COMPLETE RANGE

Quality through specialisation

BOLL & KIRCH concentrate exclusively on the design and manufacture of liquid/solid separation filters. Most BOLLFILTERs are the result of our own research and development and are protected by patents. Customers can take advantage of our knowledge by involving our technicians and engineers in the early phases of their projects. Focussing the knowledge of both partners in simultaneous engineering ensures a perfect result.

The global presence of BOLL & KIRCH in all important industrial centres guarantee to customers worldwide the reliability and service that they expect of a supplier of technologically exacting filter systems, a service that includes dispatching BOLLFILTER genuine parts all over the world within 24 hours.

Commercial production on CNC and DNC controlled machine tools.

Modern storage and logistics systems support smooth and effective production.

BOLLFILTER genuine parts leave the central warehouse within 24 hours.

BOLL Automatic filters type 6.60/6.61 – the advantages include the following:

- precisely defined filter fineness
- large filter surfaces
- minimal flushing quantities
- low pressure losses
- long service life
- precise function of back-flushing system
- compact, modular construction
- simple handling
- low maintenance costs
- long working life
- low operating costs

BOLLFILTER Protection Systems

BOLL Filter Corporation

Tel.: (+011) (734) 451-4680
Fax: (+011) (734) 451-4681
e-mail: boll@bollfilterusa.com
http://www.bollfilterusa.com

1500/08/2001